Rivet 3" Square Adjustable Downlight (76mm)

Formerly 1369

Adjustable Recessed Accent/Downlight

specialty lighting industries

The Rivet Family

In Rivet you will find a captivating, precision driven lighting instrument with a distinctly styled aperture trim. Tailored to quietly enhance architectural spaces, its unique precision milled aluminum trim is available in all of our anodized finishes, as well as field paintable. The housing's thoughtful engineering includes a magnetically attached head with a precision tilt aiming mechanism and a sliding captured lens for use in wet locations such as showers. Source options include our 90+ CRI static white LED sources and our proprietary Ambient Dim (warm dim) chip. This family is available in round or square apertures and in single or double configurations.

PROJECT: TYPE:

SPECIFIER: DATE:

3" Square Z (Flangeless)

3" Square PM (Panel)

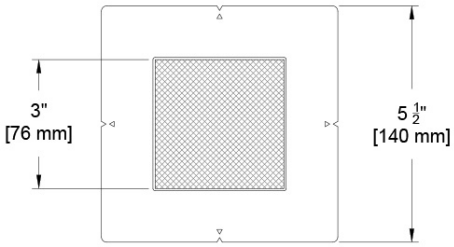

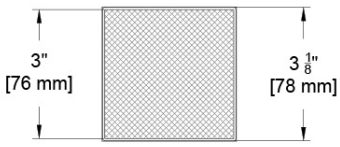

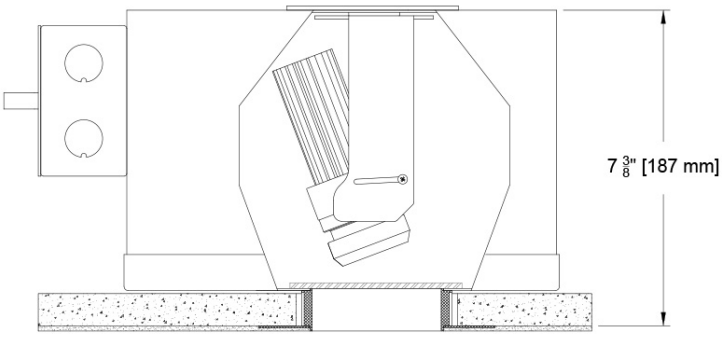

Key Points (RV3D-SA)

Trim

- Milled aluminum trims available in Flangeless or Flangeless Panel trim
- Three standard anodized finishes, clear, black and bronze, plus all of our custom anodized finishes.
- Trims are field paintable. We recommend specifying the Clear Anodize finish for trims that are to be field painted.
- Flangeless includes plaster flange with lip

Source / Optics

- Unique magnetic mounting of luminaire head promotes easy, full 360º rotational aiming, and allows toolless drop down of head for easy access to change optics and lens accessories, as well as driver servicing
- Precision engineered dual axis cam for vertical tilt aiming up to 36º allows luminaire to remain centered in aperture reducing beam clipping
- 3 beamspreads available - 20º, 28º and 40º
- Up to 1073 delivered lumens
- <2 MacAdam Steps (<2SDCM) for fixed white
- 90 CRI , 60+ R9 Standard- 95 CRI 90+R9 Optional
- 2700, 3000, 3500, 4000K and Ambient Dim (3000-1900k)
- L87B3>55,000 hours at 40ºC Ambient

Housing

- Unique integral sliding lens within housing provides c us Listed – Damp or wet with shower trim
- Heavy gauge aluminum for new construction
- IC Rated / Airtight Housing approved for use in direct contact with insulation – Chicago Plenum Available
- TITLE 24 Suports California Title 24 part 6 compliance to JA8 requirements with airtight housing

Driver

- Phase, 0-10, DALI, or Ecosystem
- Flicker free to IEEE 1789-2015 available
- Prewired and integral to housing unless otherwise noted
- Universal 120-277v unless otherwise noted

Photometric Table

All data below is based from goniometer measurement of production representative product. All lumen values can vary +/-10% from LED manufacturer rated nominal flux.

SQUARE Beamspreads		20°				28°				40°			
Source	System watts (W)	Delivered Lumens (lm)	Lumens/ Watt	Peak CD	10% Field	Delivered Lumens (lm)	Lumens/ Watt	Peak CD	10% Field	Delivered Lumens (lm)	Lumens/ Watt	Peak CD	10% Field
Citizen C7	9	746	88	3554	54°	667	78	2145	61°	688	81	1455	64°
Citizen C11	13	1073	85	4823	55°	928	74	2895	62°	959	76	2030	64°
Ambient Dim A9	10	598	59	2124	60°	529	52	1382	64°	565	56	1159	64°
Ambient Dim A11	12	685	57	2470	50°	565	47	1603	54°	592	49	1341	53°

Ambient dim measured at full output. ISO cd Plots based upon C11 Source. Refer to photometry tab on product page for exact ISO cd plot and IES files. Data is based upon a single head aimed at 0°.

© 2026 Specialty Lighting Industries

Tel. 732.517.0800 | Fax 732.517.0971

Rivet 3" Square Adjustable Downlight (76mm)

Formerly 1369

Adjustable Recessed Accent/Downlight

specialty lighting industries

Ordering Codes

PROJECT:

SPECIFIER:

DATE:

TYPE:

QUANTITY:

Ordering Code Example: RV3D-SA-Z-AU-A11-AD-28-C2-A01-91L-97L

FIXTURE	TRIM	MOUNTING	LUMENS / WATTS	CCT	BEAM	DRIVER / CONTROL	TRIM FINISH	LENS ACCESSORIES	ACCESSORIES
RV3D-SA									
Rivet 3" Square Adjustable Downlight	Z Flangeless Trim P Panel Trim * Aperture Shower Lens standard. Can be slid within housing to be open aperture.	AU ● ● Airtight Universal *IC-Rated* * ● ● California Title Compliant	**Citizen** C7 ● ● 9W 746Lm* 90+CRI, 60+R9 C11 ● ● 13W 1073Lm* 90+CRI, 60+R9 **Tunable** RGBW 90+CRI, 60+R9 **Ambient Dim™** A14 ● ● 15W 858Lm 95+CRI, 90+R9 ● ● California Title 24 Compliant to JA8 * Based on 20° beam View Photometric Data←	**Citizen** 27 2700K 30 3000K 35 3500K 40 4000K **Ambient Dim™** AD 1900-3000K	20 Spot 28 Narrow Flood 40 Flood	C1 0-10 1.0%, UNV (120-277V) linear C2 ELV/Triac 1.0%, (120-277V) linear E1 0-10 0.1%, UNV (120-277V) log E2 DALI-2 0.1%, UNV (120-277V) log E3 0-10 0.1%, UNV (120-277V) linear **Lutron** LD Digital Ecosystem* 1.0%, UNV (120-277V) ECO Hi-Lume SoftOn/Fade-to-Black LDE1 * remote driver only	A32 Clear Aluminum Anodize* A01 Black Anodize A24 Bronze Anodize AXX Specialty Anodize Color^ A1-A36 * Best finish for field painted applications ^ Refer to Finish Guide FINISH GUIDE LINK	**Reflector (lamp) Media** 91L Solite 93L Frosted 97L Black Hexcel Louver XXL Other reflector (lamp) media* Up to 2 lamp accessories can be selected. *See Lens Accessory Guide LENS ACCESSORY VISUAL GUIDE LINK	CP Chicago Plenum EM Emergency Pack* CA Casambi Wireless BLE to be paired with driver BABA BABA Compliant BABA Products **Controls** LR Lutron Wireless RF PowPak ATH Lutron Athena Wireless Node *Must be used with E2 driver* * Consult factory with requirements for availability

© 2026 Specialty Lighting Industries

NOTE: Last Updated on Wed, Oct 21, 2026 4:41 PM.
These specifications are subject to change without notice.

Specialty Lighting Industries
1306 Doris Ave., Ocean, NJ 07712
Tel. 732.517.0800 | Fax 732.517.0971

Ceiling Cutouts and Dimensions

Trim Types Indicated by Drawing

3" IC/Airtight Housing — Flangeless Trim (Z)

(RV3D-SA-Z-AU)

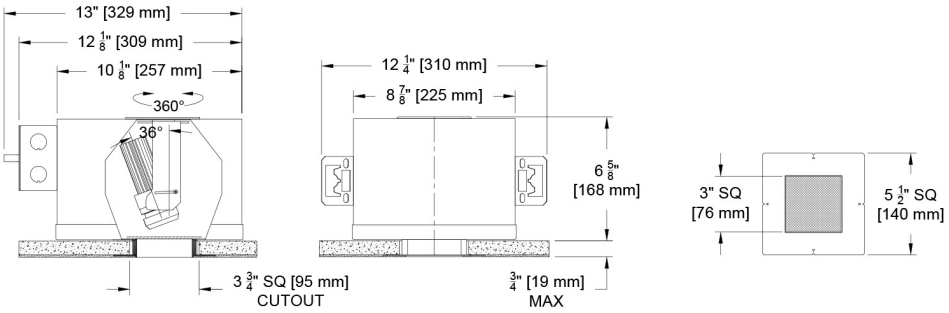

3" IC/Airtight Housing — Panel Trim (P)

(RV3D-SA-P-AU)

NOTE: This option is intended for use with precise and finished cutouts - usually millwork or wood ceilings. There is no plaster or finish flange.

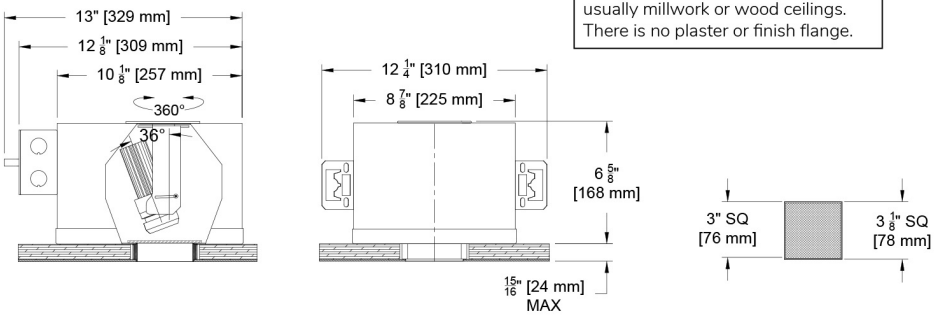

Hanger Bar Detail

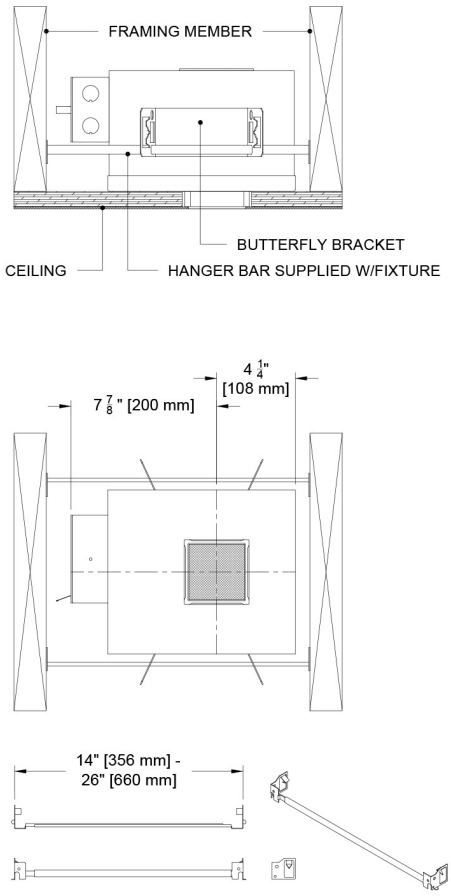

Panel Trim Detail

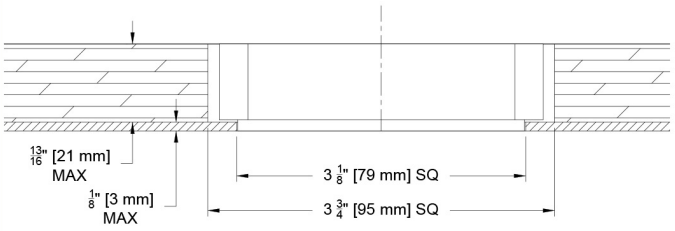

© 2026 Specialty Lighting Industries

NOTE: Last Updated on Wed, Oct 21, 2026 4:41 PM.
These specifications are subject to change without notice.

Specialty Lighting Industries
1306 Doris Ave., Ocean, NJ 07712
Tel. 732.517.0800 | Fax 732.517.0971

Photometric Table

All data is based from goniometer measurements of production representative product. All lumen values can vary +/- 10% from LED manufacturer rated nominal flux. Measurements at 3000 CCT

SQUARE Beamspreads		20°				28°				40°			
Source	System watts (W)	Delivered Lumens (lm)	Lumens/ Watt	Peak CD	10% Field	Delivered Lumens (lm)	Lumens/ Watt	Peak CD	10% Field	Delivered Lumens (lm)	Lumens/ Watt	Peak CD	10% Field
Citizen C7	9	746	88	3554	54°	667	78	2145	61°	688	81	1455	64°
Citizen C11	13	1073	85	4823	55°	928	74	2895	62°	959	76	2030	64°
Ambient Dim A9	10	598	59	2124	60°	529	52	1382	64°	565	56	1159	64°
Ambient Dim A11	12	685	57	2470	50°	565	47	1603	54°	592	49	1341	53°

CCT Multiplier	
CCT	Citizen
2700	0.95
3000	1.00
3500	1.02
4000	1.03

Beam angle

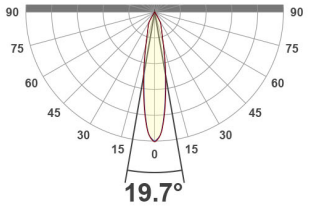

19.7°

Beam angle

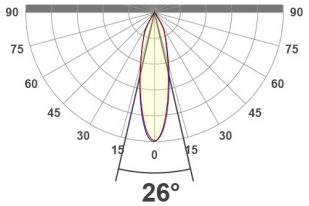

26°

Beam angle

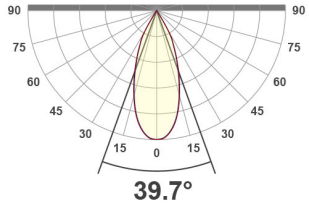

39.7°

ISO cd Plots based upon C11 Source. Refer to photometry tab on product page for exact ISO cd plot and IES files.

© 2026 Specialty Lighting Industries

Specialty Lighting Industries
1306 Doris Ave., Ocean, NJ 07712
Tel. 732.517.0800 | Fax 732.517.0971

Color Data

All data is based from goniometer measurements of production representative product. All lumen values can vary +/- 10% from LED manufacturer rated data range. Measurements at 3000 CCT

Citizen Source C7, C11

- <2 MacAdam Ellipse (<2 SDCM)
- 90+ CRI and RF
- 60+R9, Hue Bin 1

94 CRI | 70 R9 | 91 RF | 100 RG

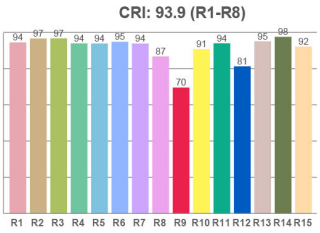

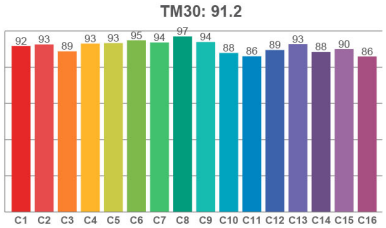

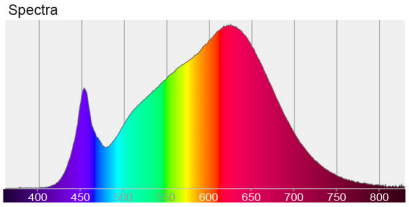

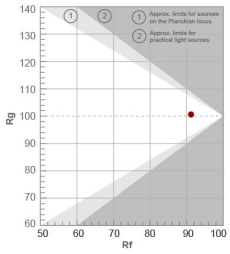

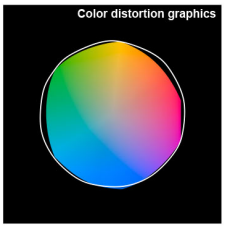

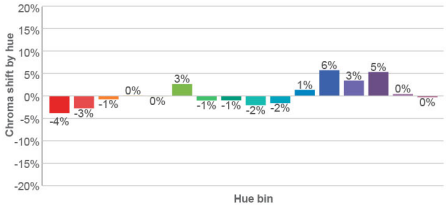

Ambient Dim Source A9, A11 (AD - 3000k to 1900k)

- <3 MacAdam Ellipse (<3 SDCM)
- 95+ CRI and RF
- 90+R9, Hue Bin 1
- Follows Black Body Locus through dimming range

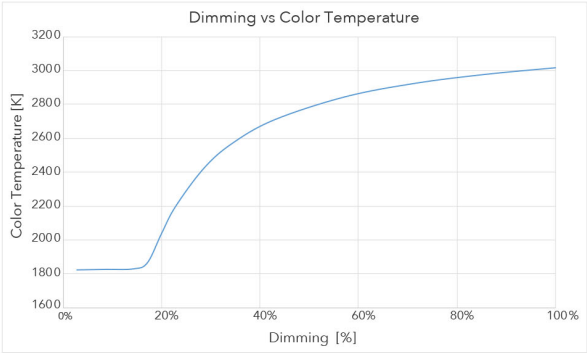

3000 CCT Full Output

97 CRI | 98 R9 | 95 RF | 104 RG

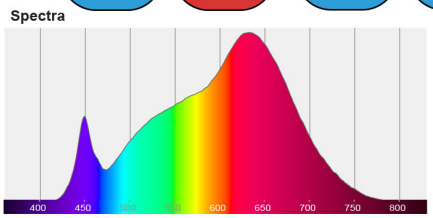

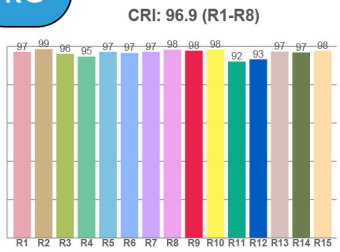

1850 CCT 5% Output

93 CRI | 72 R9 | 83 RF | 110 RG

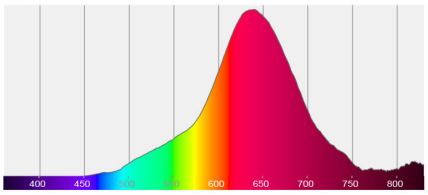

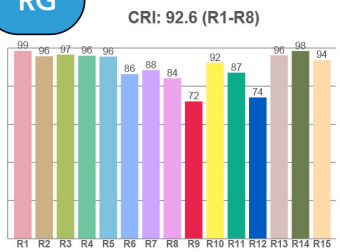

© 2026 Specialty Lighting Industries
NOTE: Last Updated on Wed, Oct 21, 2026 4:41 PM.
These specifications are subject to change without notice.
Specialty Lighting Industries
1306 Doris Ave., Ocean, NJ 07712
Tel. 732.517.0800 | Fax 732.517.0971